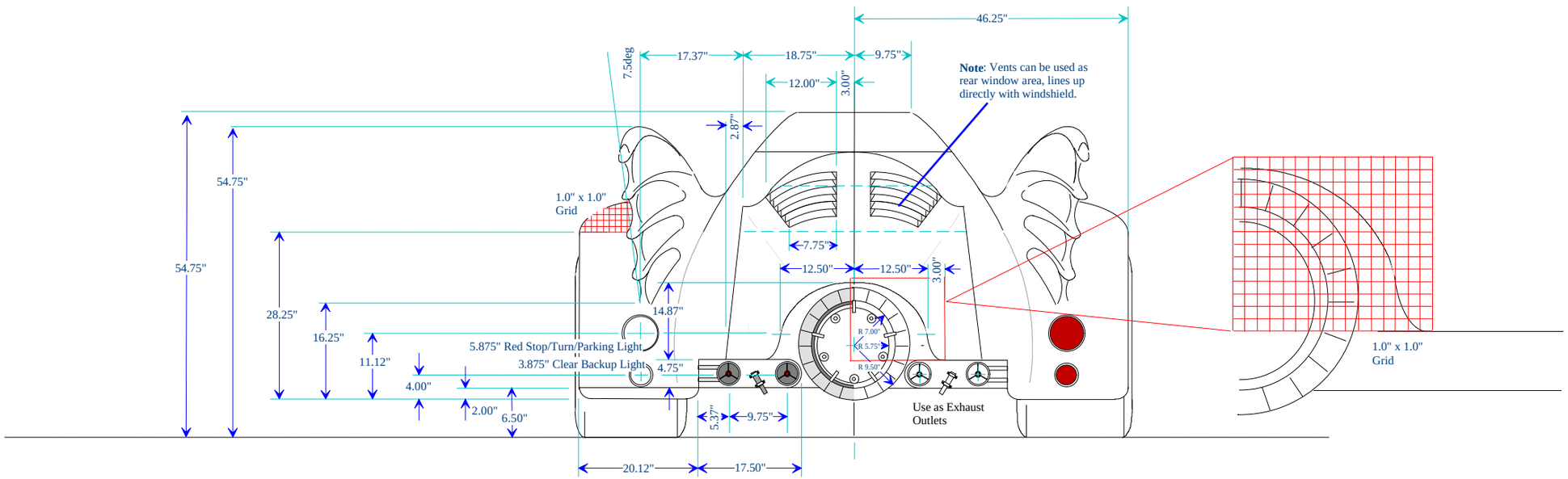

BACK VIEW

89 BATMOBILE

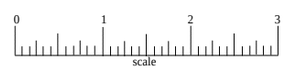

batmobile89@hotmail.com